MORA MMIX T5 shower mixer

Mora MMIX combines elegance and ergonomic design with energy-efficiency. Soft geometric curves and a timeless style characterise the entire Mora MMIX range. The mixers were developed according to our unique EcoSafe™ concept focusing on low energy consumption and long-term environmental care.

Article number: 731100.0011 **RSK:** 8344069
Description: Chrome/black, 150 c/c

- With shower connection down
- Pressure balanced thermostatic mixer
- Temperature handle with safety stop at 38°C
- With Eco-function
- Lead Free material
- Approved non-return valves, EN-Standard EN1717

Uniqe characteristics

Accepted

Backflow protection unit type EB

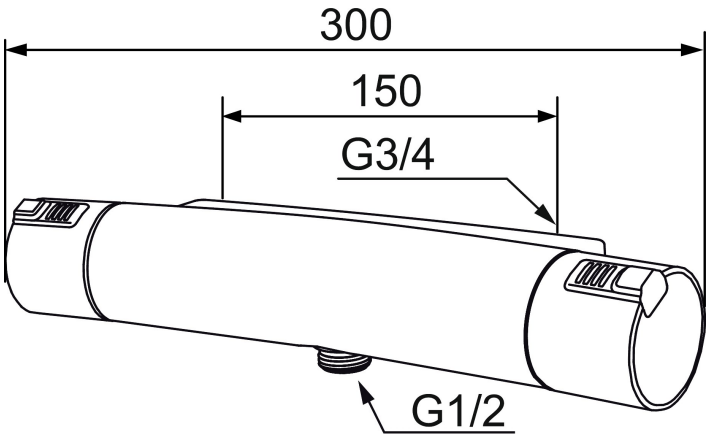

PRODUCT DESCRIPTION

MORA MMIX T5 shower mixer

Mora MMIX combines elegance and ergonomic design with energy-efficiency. Soft geometric curves and a timeless style characterise the entire Mora MMIX range. The mixers were developed according to our unique EcoSafe™ concept focusing on low energy consumption and long-term environmental care.

Article number: 731100.0011 **RSK:** 8344069

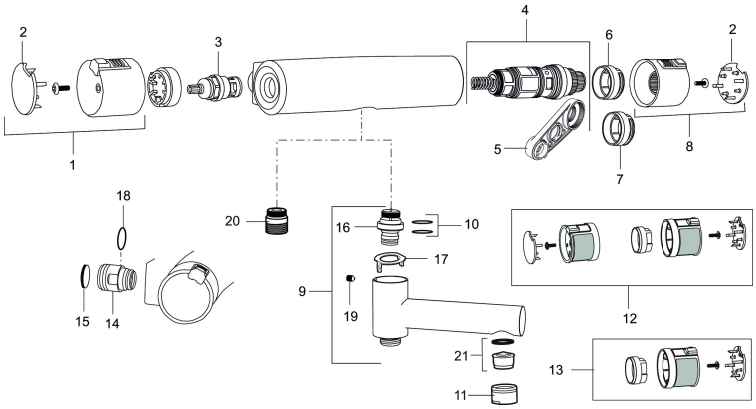

Sparepartlist

NO.	ART NO.	RSK	DESCRIPTION
1	409353.AA	8345088	On/off handle, complete, chrome, retail packed
1	409353.0011AA	8345087	On/off handle, complete, chrome/black, retail packed
2	409358.AA	8345089	End cover, chrome, retail packed
2	409358.0011AA	8345090	End cover, black, retail packed
3	S600274	8397028	Ceramic headwork (G15)
4	S600275	8397029	Thermostatic cartridge, complete, incl. service tool
5	S600298	3870203	Service tool
6	S600311	8397045	Scalding protection ring (standard), black
7	409364.AE	8346506	Scalding protection ring, (max 42 °C)
8	409352.AA	8345086	Temperature handle, complete, chrome, retail packed
8	409352.0011AA	8345085	Temperature handle, complete, chrome/black, retail packed
9	409356	8344853	Swivel spout, for coversion of shower mixer to bath/shower mixer, chrome
10	209519.AE	8938340	O-ring, for swivel spout
11	131415.AE	8281512	Housing M24 utv., 15 mm, chrome
12	409370.AA	8345139	Rebuild kit, care, black/chrome, retail packed
12	409370.0085AA	8345162	Rebuild kit, care, lime/black, retail packed
12	409370.0095AE	8345210	Rebuild kit, care, red/black
13	409440.AE	8345211	Rebuild kit with fixed temp. stop, care, chrome

NO.	ART NO.	RSK	DESCRIPTION
14	409360.AA	8187781	Inlet connector 150 c/c (left-handed thread), retail packed
14	409361.AE	8228492	Inlet connector 160 c/c
15	409359.AA	8345172	Filter kit for connecting links, retail packed
16	409366.AE		Nipple M18x1 with o-ring for bath mixer
17	38521000	8295345	Stop ring
18	129131.AE	8295316	O-ring (18,1 x 1,6), 2 pcs
19	708655.AE	8295447	Locking screw
20	409365.AE	8187026	Nipple M18x1 - G1/2
21	139783.AE	8281546	Aerator inlet, 20–24 l/min at 300 kPa