MORA MARE VIII, bathtub

A freestanding bath, with a gently scooped profile that comes in a tactile matt finish, its seamless rolled edges give a sense of structure and centrally-positioned plug allows for bathing at either end.
Our uniquely engineered overflow minimises the risk of overspill.

About the collection

The calming Mare range, meaning ocean in Latin. Freestanding baths in premium acrylic with a lighter edge thickness. Clean lines and easy curves combine with function and convenience.

In any color you want

Article number: 951108.22
Description: Matte white, L1700 x W810 x H680

Uniqe characteristics
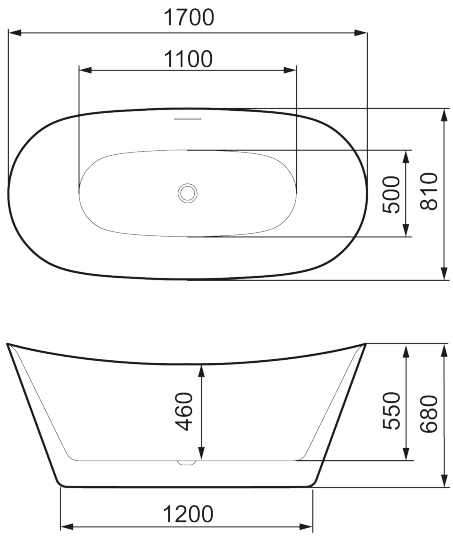
- Freestanding bathtub in acrylic
- Double-sided model - relaxing soak at either end of the tub
- Pre-installed white bottom valve
- Discrete integrated overflow
- Slimline
- Volume: 210 l
- Weight: 48 kg