MMIX II shower system kit

Our classic chrome MMIX shower system is revised with a bold new straight-lined form and increased proportions for superior functionality and aesthetics. Internally, it features an updated thermostat to maximise energy efficiency while enhancing your showering experience.

Article number: 331900.LD **RSK:** 8283437 **Flow 3 bar:** 6.0 l/m
Description: Chrome, 150 c/c, LEED/BREEAM compliant

Consist of:

MORA MMIX II thermostatic mixer:

- Pressure balanced thermostatic mixer
- With reversible headwork
- Temperature handle with safety stop at 38°C
- With Eco-function
- Lead Free material
- Approved non-return valves, EN-Standard EN1717

MORA MMIX II Shower System:

- Shower hose in metal, PVC- and BPA-free
- With Easy-Clean anti-limescale system
- Wall bracket freely adjustable in height, 700–1000 from connection and 50–100 mm from wall, 2x20 mm spacers included, with sealing, hidden pipe joint

Uniqe characteristics

Accepted
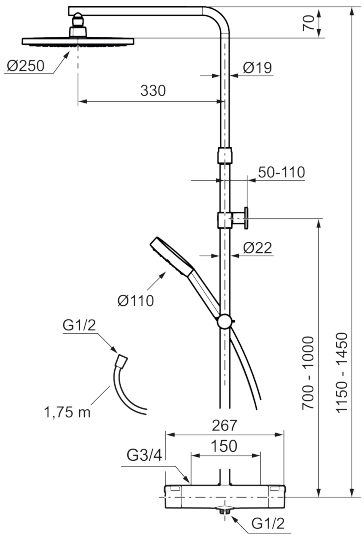
Backflow protection unit type EB