MMIX II soft kitchen mixer

MMIX II soft has a gently curved geometric design that exudes a classic, easy-to-work-with style.

Article number: 332151 **RSK:** 8312165 **Flow 3 bar:** 6.0 l/m
Description: Chrome

- ESS (energy saving system)
- Ceramic cartridge with soft closing function
- Adjustable flow control and temperature limiter
- Swivel spout 60°, 85°, 110° or 360° (limitation part for 60° or 110° included)
- With dishwasher valve, switchable between cold and hot water. Pre-set on cold water
- Soft PEX® hoses with 3/8" connecting nut (stainless steel braided)
- Lead Free material
- Hole diameter Ø34-37 mm

Uniqe characteristics

Energy class

Accepted
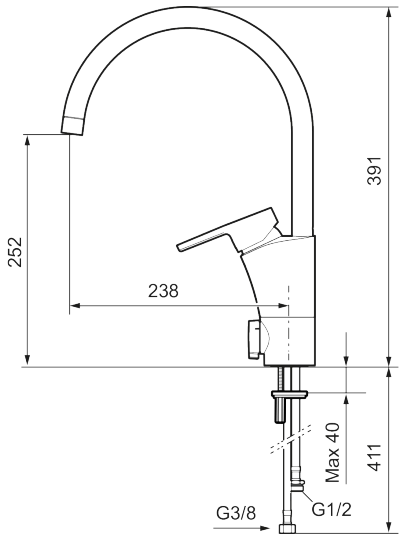
Backflow protection unit type AA