INXX II shower system kit

With its durable, trendy polished brass finish the INXX II combines classic design with high performance, constant temperature, outstanding comfort and effective scald protection. The overhead shower has a large, slim shower head that looks great in bathrooms with a strong character and striking shapes, as well as in classic bathrooms designed for rest and relaxation. The mixer has been tested and approved according to current building regulations and is energy-efficient, which means it reduces water and energy use without compromising on comfort. The INXX II collection offers a world-class water experience.

About the collection

INXX II is an elegant, timeless collection in a palette of carefully selected colours. Offering a combination of high quality, sober design and outstanding comfort, this is the ultimate collection.

Article number: 271900.60 **RSK:** 8283093 **Flow 3 bar:** 11.3 l/m
Description: Polished brass PVD, 150 c/c

Uniqe characteristics

Energy class

Assessed

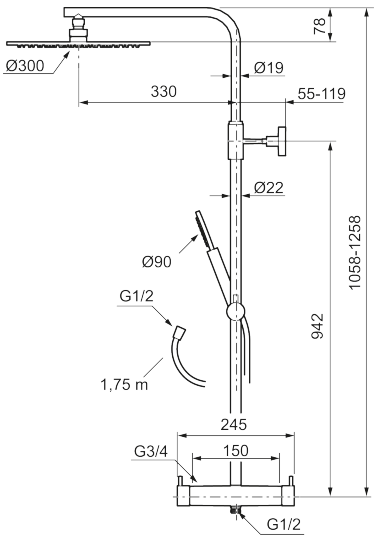

Consist of:

MORA INXX II thermostatic mixer:

- Pressure balanced thermostatic mixer
- With reversible headwork
- Temperature handle with safety stop at 38°C
- With Eco-function
- Approved non-return valves, EN-Standard EN1717

MORA INXX II Shower System:

- Shower hose in metal, PVC- and BPA-free
- With Easy-Clean anti-limescale system
- Adjustable height
- Hand shower 7,5 l/min, shower head 11 l/min