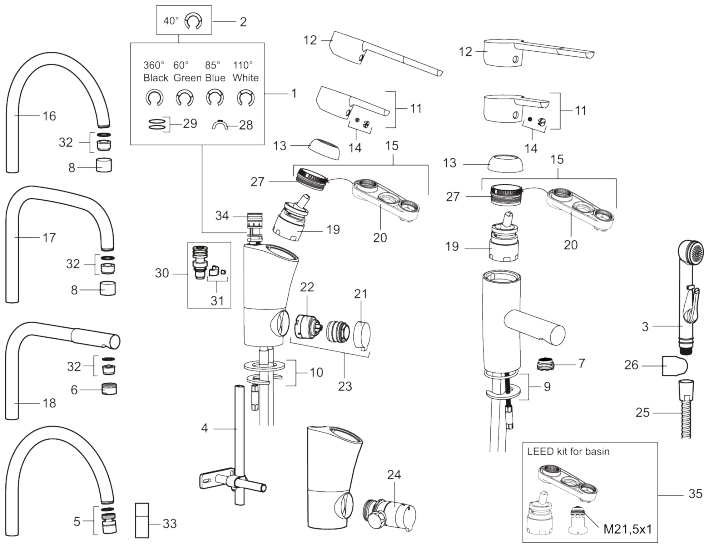

MORA MMIX basin and kitchen mixer

Article number: MoraMMIX_kök_tvätt

Uniqe characteristics