MORA MMIX tronic basin mixer, battery operation

MORA MMIX tronic is a new sensor controlled basin mixer. Sensor controlled mixers started out in public facilities, but are increasingly finding their way into modern homes. A sensor detects when you put your hands underneath the mixer and automatically activates the water flow until you remove your hands. Hygienic, energy-efficient and childishly simple.

Article number: 720080 **Flow 3 bar:** 5.0 l/m
Description: Chrome, battery operation (included battery), 5 l/min at 200–600 kPa

Uniqe characteristics

Accepted

Backflow protection unit type EB

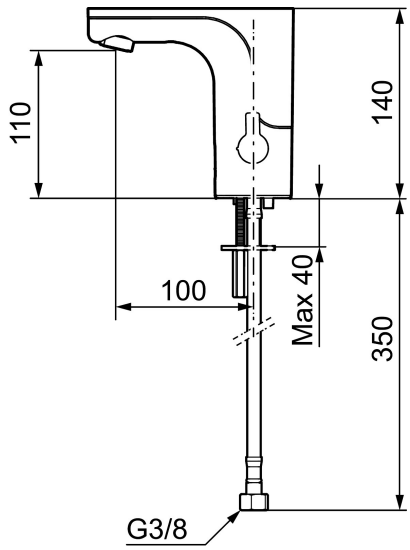

- With temperature knob, battery operation (included battery)
- Soft closing solenoid valve
- Safe against vandalism, complete in metal
- Eco (energy and water saving constant flow aerator)
- Flush Timeout - safety shut-off to prevent flooding
- 30 sec. rinse time via sensor
- Can be turned off for 60 sec. (eg for cleaning)
- Low power consumption - Long life
- Equipped with system for thermal disinfection against legionella
- IP class sensor, IP67
- Approved non-return valves, EN-Standard EN1717
- Environmental friendly material, Lead free, Nickel Free

Installation:

- Automatic sensor calibration
- After adjusting to the desired temperature, knob can be replaced with a lid
- All models can be adapted for either battery 6V or mains operation 12V AC/DC
- For mains operation requires installation of the adapter kit art.no. S600147
- Soft Pex® hoses with non return valves and filters (stainless steel braided)

- Hole diameter Ø33,5-37 mm

Settings:

- Adjustable max temperature
- Programmable function for hygiene flushing
- Adjustable flush time

PRODUCT DESCRIPTION

MORA MMIX tronic basin mixer, battery operation

MORA MMIX tronic is a new sensor controlled basin mixer. Sensor controlled mixers started out in public facilities, but are increasingly finding their way into modern homes. A sensor detects when you put your hands underneath the mixer and automatically activates the water flow until you remove your hands. Hygienic, energy-efficient and childishly simple.

Article number: 720080

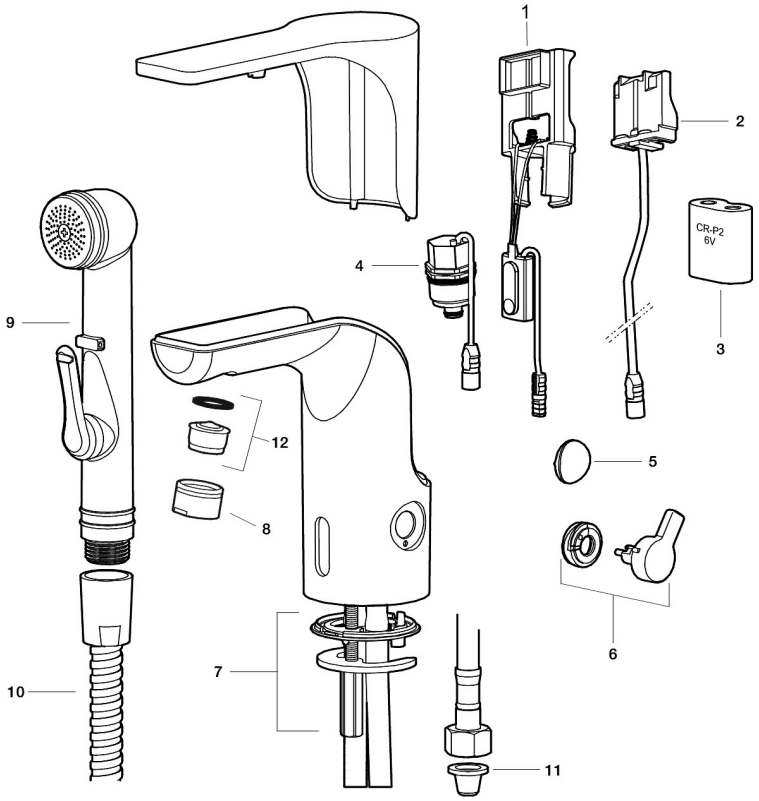

Sparepartlist

NO.	ART NO.	RSK	DESCRIPTION
1	729450.ae	8553556	Electronic unit, standard
1	729452.AE	8553558	Electronic unit, centrally controlled
2	S600131	8483190	AC adapter
3	S600135	8483191	Battery
4	729455.AE	8553561	Solenoid valve
5	729457.AE	8553563	Cover plug
6	729456.AE	8553562	Lever, chrome
6	729456.11AE	8483168	Lever, black PVD
6	729456.14AE	8483180	Lever, polished copper PVD

NO.	ART NO.	RSK	DESCRIPTION
6	729456.16AE	8483181	Lever, champagne PVD
6	729456.60AE	8483182	Lever, polished brass PVD
7	729458.AE	8553564	Fastening
8	131415.AE	8281512	Housing M24 utv., 15 mm, chrome
8	131415.11AE	8281550	Housing M24 utv., 15 mm, black PVD
8	131415.14AE	8281662	Housing M24 ext., 15 mm, polished copper PVD
8	131415.16AE	8281663	Housing M24 ext., 15 mm, champagne PVD
8	131415.60AE	8281664	Housing M24 ext., 15 mm, polished brass PVD
9	729485.AE	8184336	Self-closing handshower
10	S600207	8236647	Shower hose, L=1,5 m, chrome
11	129296.AE	8295327	Filter kit Soft PEX 3/8 (2 pcs)
12	132205.AE	8281441	Aerator insert, 5 l/min at 200–600 kPa
12	S600072	8281671	Aerator insert, 3 l/min at 200–600 kPa
12	S600226	8280024	Aerator insert, 1,7 l/min at 200–600 kPa