MORA MMIX tronic basin mixer, battery operation

MORA MMIX tronic is a new sensor controlled basin mixer. Sensor controlled mixers started out in public facilities, but are increasingly finding their way into modern homes. A sensor detects when you put your hands underneath the mixer and automatically activates the water flow until you remove your hands. Hygienic, energy-efficient and childishly simple.

Article number: 720080.60 **Flow 3 bar:** 5.0 l/m
Description: Polished brass PVD, battery operation (included battery), 5 l/min at 200–600 kPa

Uniqe characteristics

Accepted

Backflow protection unit type EB

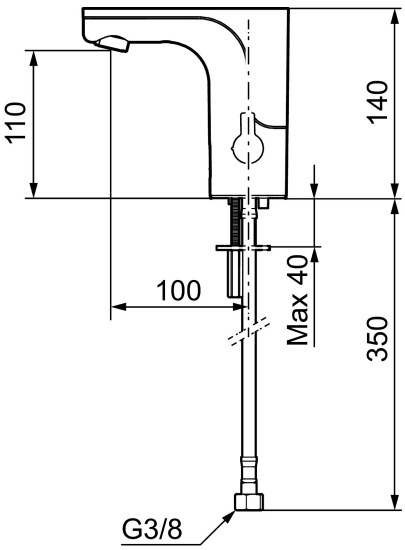

- With temperature knob, battery operation (included battery)
- Soft closing solenoid valve
- Safe against vandalism, complete in metal
- Eco (energy and water saving constant flow aerator)
- Flush Timeout - safety shut-off to prevent flooding
- 30 sec. rinse time via sensor
- Can be turned off for 60 sec. (eg for cleaning)
- Low power consumption - Long life
- Equipped with system for thermal disinfection against legionella
- IP class sensor, IP67
- Approved non-return valves, EN-Standard EN1717
- Environmental friendly material, Lead free, Nickel Free

Installation:

- Automatic sensor calibration
- After adjusting to the desired temperature, knob can be replaced with a lid
- All models can be adapted for either battery 6V or mains operation 12V AC/DC
- For mains operation requires installation of the adapter kit art.no. S600147
- Soft Pex® hoses with non return valves and filters (stainless steel braided)

- Hole diameter Ø33,5-37 mm

Settings:

- Adjustable max temperature
- Programmable function for hygiene flushing
- Adjustable flush time