MORA CERA duo kitchen mixer

Modern technology has found its way into the kitchen faucet. Now you don´t have to worry about the risk of bacteria moving onto your kitchen faucets while you cook. Mora Cera Duo is a perfect combination of the modern touchless technology and a traditional kitchen mixer. This gives you the possibility to get full cold or warm water by using the lever like on a traditional single lever mixer.

This also works well in a household where not everyone is comfortable with the touchless design and still wants access to the lever. The water temperature for water activated by the sensor is pre-set on the mixing valve placed under the mixer, this means that you don´t need to adjust the temperature on the lever before using the touchless function.

Uniqe characteristics

Assessed

The Duo mixer offer not only maximum protection against the spread of bacteria, but are also extremely economical because they deliver the exact amount of water that is needed. The mixer is equipped with all advanced technology that you normally find in Mora Armatur mixer – ESS, Soft Closing, EcoSafe® etc. Low power consumption - Battery Operated (battery included) can be adapted for mains operation 12V AC/DC.

Backflow protection unit type EB

Article number: 242102
Description: Chrome, battery operation, included battery

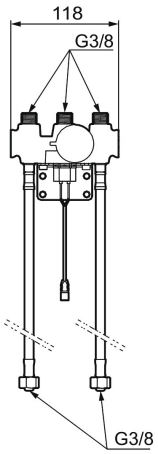

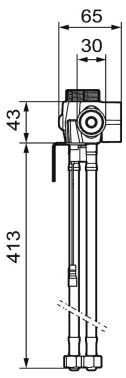

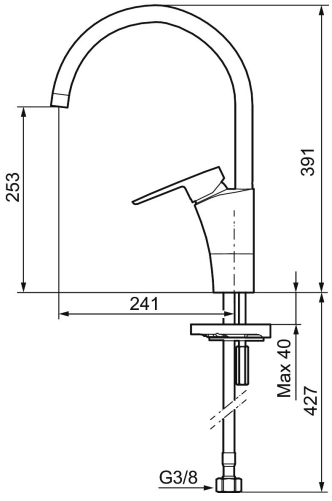

- ESS (energy saving system)
- Ceramic cartridge with soft closing function
- Adjustable flow control and temperature limiter
- Eco (energy and water saving aerator)
- Swivel spout, limitation part for 60°, 85°, 110° or 360° included
- Flush Timeout - safety shut-off to prevent flooding
- Can be turned off for 5 min. (eg for cleaning)
- Low power consumption - Long life
- IP class sensor, IP67
- Approved non-return valves, EN-Standard EN1717

Installation:

- Automatic sensor calibration

- All models can be adapted for either battery 6V or mains operation 12V AC/DC
- For mains operation requires installation of the adapter kit art.no. S600147
- Soft PEX® hoses with 3/8" connecting nut (stainless steel braided)
- Hole diameter Ø34-37 mm

Settings:

- Programmable detection distance
- Adjustable flush time

PRODUCT DESCRIPTION

MORA CERA duo kitchen mixer

Modern technology has found its way into the kitchen faucet. Now you don´t have to worry about the risk of bacteria moving onto your kitchen faucets while you cook. Mora Cera Duo is a perfect combination of the modern touchless technology and a traditional kitchen mixer. This gives you the possibility to get full cold or warm water by using the lever like on a traditional single lever mixer.

This also works well in a household where not everyone is comfortable with the touchless design and still wants access to the lever. The water temperature for water activated by the sensor is pre-set on the mixing valve placed under the mixer, this means that you don´t need to adjust the temperature on the lever before using the touchless function.

The Duo mixer offer not only maximum protection against the spread of bacteria, but are also extremely economical because they deliver the exact amount of water that is needed. The mixer is equipped with all advanced technology that you normally find in Mora Armatur mixer – ESS, Soft Closing, EcoSafe® etc. Low power consumption - Battery Operated (battery included) can be adapted for mains operation 12V AC/DC.

Article number: 242102

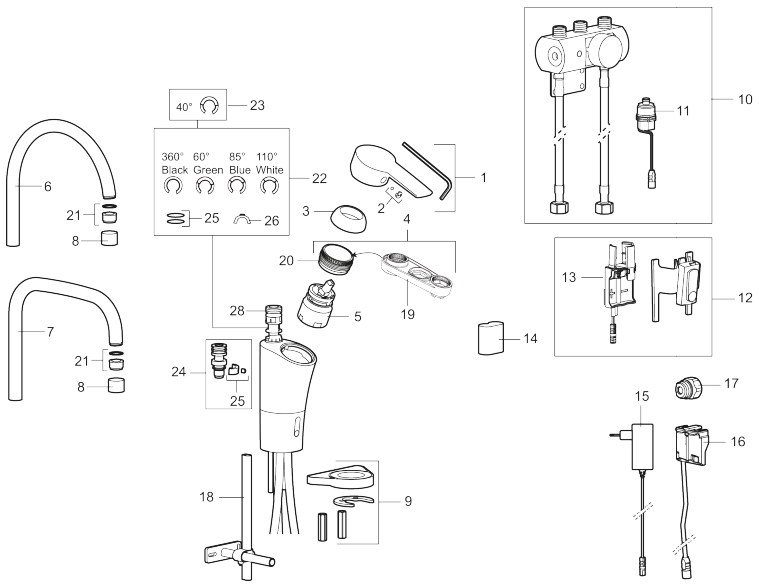

Sparepartlist

NO.	ART NO.	RSK	DESCRIPTION
1	409600.AE	8345186	Lever, complete

NO.	ART NO.	RSK	DESCRIPTION
2	409392.AE	8344866	Colour marking and mounting screw for lever
3	409391.AE	8344865	Cover nut
4	409393.AE	8345179	Lock nut for cartridge, incl service tool
5	409403.AE	8345132	Ceramic cartridge, incl service tool
6	409498.AE	8440573	Spout K5, complete
7	409496.AE	8440571	Spout K7, complete
8	131410.AE	8281509	Housing M22 int.
9	409388.AE	8346914	Fastening details, kitchen
10	729443		Mixing valve
11	729455.AE	8553561	Solenoid valve
12	S600166	8387157	Sensor
13	729441.AE		Battery holder
14	S600135	8483191	Battery
15	S600129	8483188	Power supply 12V
16	S600131	8483190	AC adapter
17	S600141	8229257	Transition nipple
18	409340.AE	8531598	Stabilization kit
19	891096.AE	8345921	Service tool
20	439060.AE	8295361	Lock nut
21	131400.AE	8281495	Aerator insert, 11–15 l/min at 300 kPa
22	209524.AE	8346915	Limitation segment
23	209543.AE	8346916	Limitation segment 40°
24	708843.AE	8295357	O-ring (15,54 x 2,62), 2 pcs
25	309519.AE	8295318	Fixed plug, 2 pcs (black/grey)
26	109016.AE	8295331	Spout nipple, complete, for fixed spout
27	139595.AE	8295313	Stop screw with limitation segment
28	S600018	8394128	Spout nipple, complete